Beer Ace II

166-257-XX

The Beer Ace II has been designed to accept pressurised beer and lagers, directly from the keg. The pump will operate from a gas supply up to 85 psi (5.8 bar), enabling greater dispense distances and lifts to be achieved, while not affecting the carbonation levels of the product as intended by the brewer. The pump will operate on either a supply of CO_2 or Mixed Gas or from a clean dry source of compressed air.

The Beer Ace II is a gas driven demand pump, automatically operated when a tap is opened at the bar. The pump has been designed to supply up to three taps up to 150 metres (500 feet) from a keg with a flow rate of between 3.8 – 11.4 l/min. Actual flow rates will be determined by the length of run, line size, vertical lift, keg top pressure and the number of taps being used on the bar.

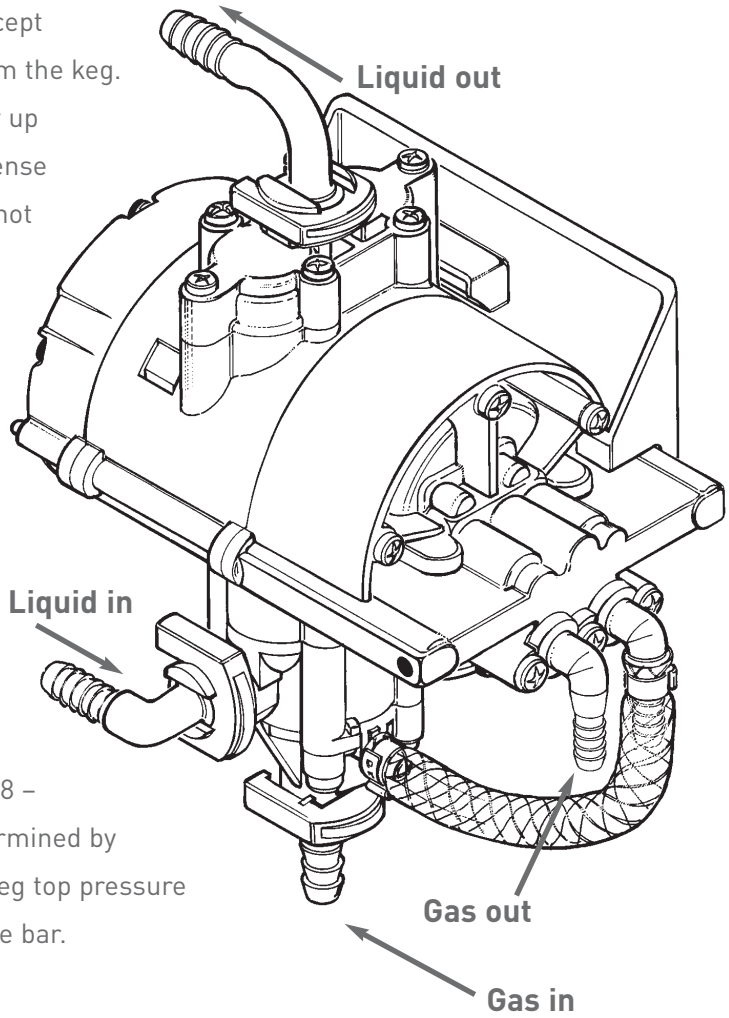

Typical layout

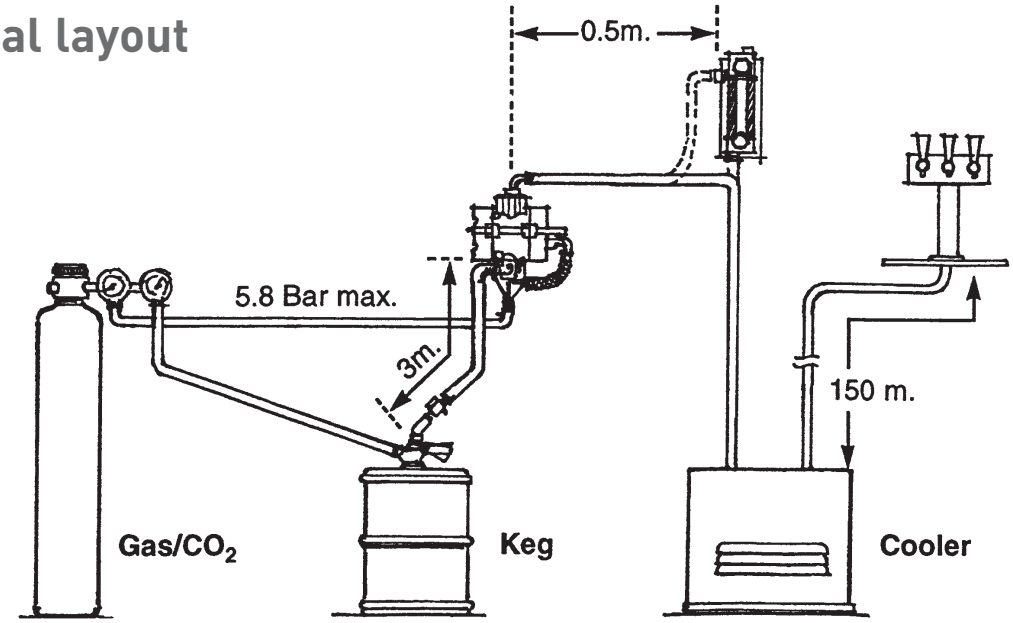

Beer Ace II

(Installation Guidelines)

The pump should be mounted with the liquid outlet port at the top.

The distance from the keg to the liquid inlet of the pump must not exceed 3m (10ft).

Brewery approved high pressure tubing should always be used for the gas supply to the pump. Alter the gas pressure to control the operating speed of the pump.

Pumps operated by CO_2 must be kept in a well ventilated area. Where this is not possible (e.g. in an enclosed cellar) the gas exhaust should be vented to atmosphere.

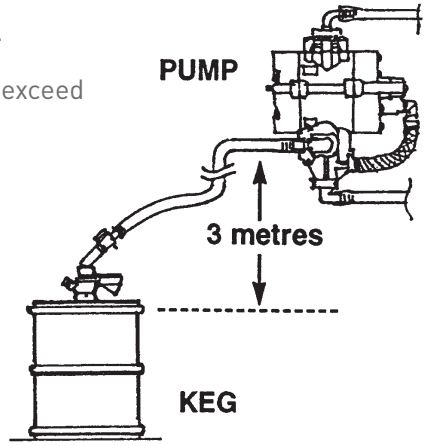

Beer Ace II Performance

In the event of gas breakout (Fobbing) over long line runs, increase the pump pressure. Increase line restriction at the tap if dispense speed is too fast.

This data is based on a keg balance pressure of 1 to 1.4 bar (15 to 20 psi). At 3.4 bar maximum flow to each tap was set at 3.22 LPM.

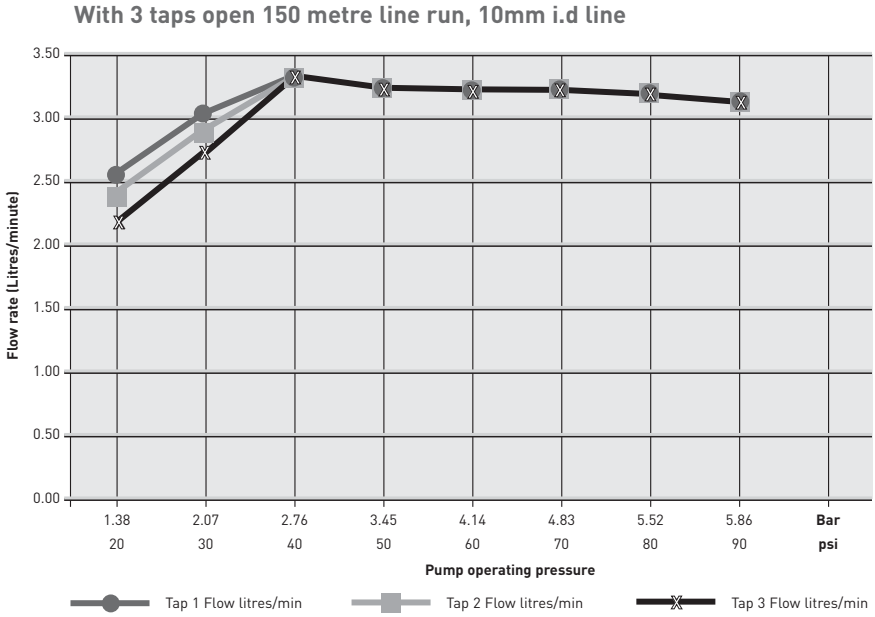

Pressure Setting

The pump gas regulator should be set between 1.5 bar (22 psi) and 5.8 bar (85 psi).

The pump pressure should be a minimum of 0.5 bar (7 psi) higher than keg pressure.

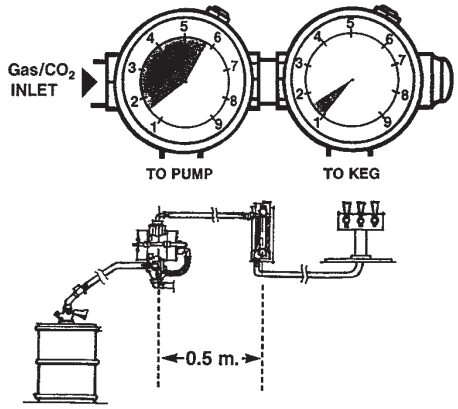

Installing Fob Detectors

In normal operation (before the keg becomes empty) the Beer Ace II is designed to stop pumping when the serving tap is closed. For automatic shut-off with an empty keg, a fob shut-off device such as the SHURflo Fob-Stop should be fitted. The SHURflo Fob-Stop must be plumbed between the keg and the pump. If other types of Fob detectors are used, they must be plumbed into the liquid outlet line not more than 0.5m from the pump.

Right-ward Stroke

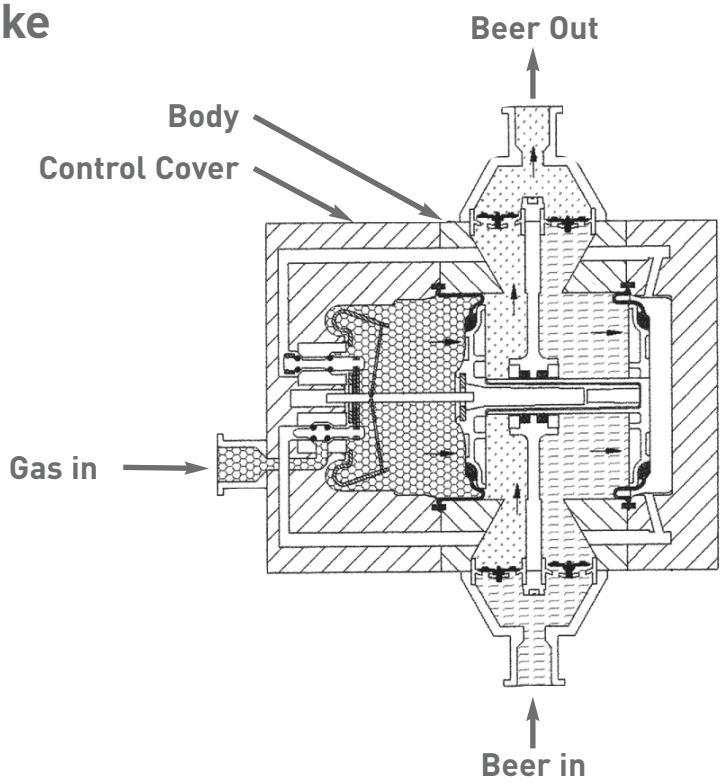

Left-ward Stroke

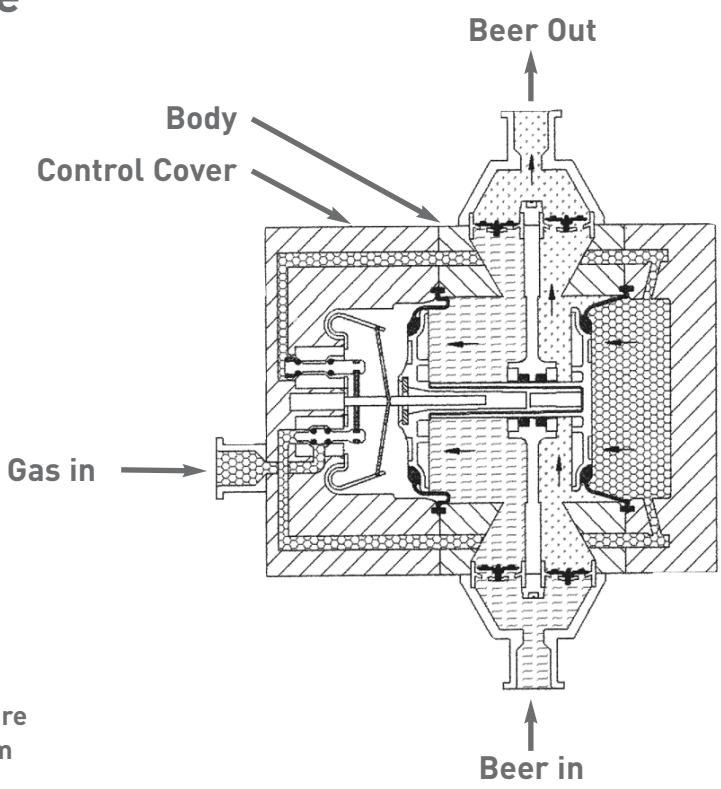

Gas (CO_2)
Beer under pressure
Beer under vacuum

Beer Ace II

(Gas/Air Operated Pump)

Model Number 166-257-XX

Design:	Two chamber double diaphragm.
Power Source:	CO_2 gas, Nitrogen or clean compressed air.
Materials of Construction:	Polypropylene, Celcon, EPDM, Santoprene, Stainless steel.
Body colour:	Black.
Temperature Limits:	1.1 to 49C (34 to 120 degrees F).
Weight:	0.5 kg (1.2 lbs).
Size:	171mm (7.3 inches) H x 145mm (5.9 inches) W x 97mm (3.8 inches).
Fittings available:	**Liquid** 6mm (1/4''), 10mm (3/8'') & 12mm (1/2'') straight and elbows in plastic or st. 10mm (3/8'') J. Guest style smooth stem. **Gas** 6mm (1/4'') elbow and "T" with check valve, 6mm (1/4'') elbow and straight no check valve. 10mm (3/8'') and 8mm (5/16'') J. Guest style smooth stem.
Displacement:	101cc per cycle.
Maximum Operating Pressure:	5.8 bar (85 psi).
Minimum Operating Pressure:	1.4 bar (20 psi).
Inlet Pressure:	Must be a minimum of 0.5 bar (7 psi) lower than pump drive pressure.
Flow Rate:	11 litres per minute dependant on liquid inlet pressure and line size.

Beer Ace II

(Flow rates)

With 3 taps open 150 metre line run, 10mm i.d line

Gas pump Pressure (Bar)	Gas pump Pressure (PSI)	Tap 1 Flow litres/min	Tap 2 Flow litres/min	Tap 3 Flow litres/min
1.38	20	2.57		
1.38	20	2.27	2.23	
1.38	20	2.20	2.12	1.97
2.07	30	3.26		
2.07	30	2.84	2.69	
2.07	30	2.54	2.42	2.20
2.76	40	3.79		
2.76	40	3.48	3.33	
2.76	40	3.03	2.91	2.73
3.45	50	4.16		
3.45	50	3.71	3.71	
3.45	50	3.22	3.22	3.22
4.14	60	4.16		
4.14	60	3.79	3.79	
4.14	60	3.22	3.22	3.22
4.83	70	4.16		
4.83	70	3.79	3.79	
4.83	70	3.22	3.22	3.22
5.52	80	4.16		
5.52	80	3.79	3.79	
5.52	80	3.22	3.22	3.22
5.86	90	4.16		
5.86	90	3.67	3.67	
5.86	90	3.20	3.20	3.20

Note: Maximum pump operating pressure is 5.8 Bar/85 PSI Keg pressure 1.5 Bar Media – Water
Beer Ace Model 166-257-XX NOTE: AT 3.4 BAR AND ABOVE MAX FLOW TO EACH TAP WAS SET AT 3.22 LPM.